RailStar motor driven trolley

- Fits wide range of beam sizes for maximum versatility
- Universal use with any hook suspended single speed hoists that are equipped with reversing contactor
- Steel spur gearing for optimum strength and smooth operation
- Durable hardened cast iron trackwheels that operate on standard S-beams or flat flanged beams
- Lifetime lubricated double row ball bearings for high efficiency, low maintenance
- Cast iron control enclosure
- Four-button control station included for operating single speed hoist. Drop proportioned to 20' lift
- Steel plate side frames
- 115 volt control circuit on 1 phase units 48 volt control circuit on 3 phase units
- Trolley guards standard
- One-year warranty
- Metric rated
- Imported

Clearance dimensions (in.)

Dimension	Rated capacity* (tons) 1/8 - 2	3
A	12 3/4	14 1/8
B	6 3/8	6 3/4
C**	4 13/16	5 1/4
D	3 9/16	3 15/16
E	2 9/16	2 15/16
F**	4 3/4	5 3/16
G**	6	6 5/16
H**	17 ft.	17 ft.
J	7 1/2	9 15/16
K	4 1/8	4 11/16
SINGLE PHASE L	12 3/4	15 3/16
THREE PHASE L	11 7/16	13 7/8
M**	1 1/2	2 15/16
N**	3/8	3/4
P**	1 7/16	1 9/16
Q**	5 1/8	5 7/8
R	1/2	3/4
S	1 1/16	1 1/16
T**	8 7/8	9 9/16

**Dimensions given are for minimum S-beam and will vary with larger beams.

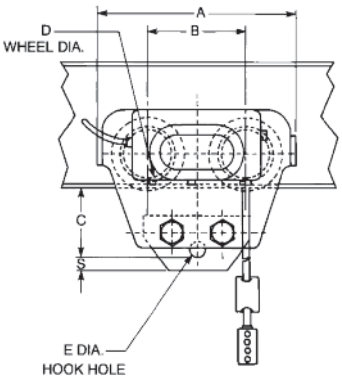

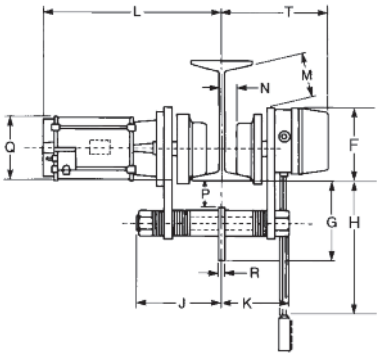

Specifications

Rated capacity (tons)	Product Code	Operating Voltage 50 hertz	Operating Voltage 60 hertz	Phase	Travel Speed 50 hertz (F.P.M.)	Travel Speed 60 hertz (F.P.M.)	Motor H.P.	Min. beam size	Max. beam size	Shipping weight (lbs)
1/8-2	0300	220/380-415	220-240/440-480	3	65	78	1/3	S6x12.5	S18x54.7	108
1/8-2	0301	n/a	110-120	1	n/a	78	1/3	S6x12.5	S18x54.7	113
3	0302	220/380-415	220-240/440-480	3	65	78	3/4	S8x18.4	S24x79.9	185
3	0303	n/a	110-120	1	n/a	78	3/4	S8x18.4	S24x79.9	190

Note: Three phase units are reconnectable for high and low range voltage

*** ⚠ WARNING**

Overloading and improper use can result in injury.

To avoid injury:
- Do not exceed working load limit, load rating capacity
- Do not use to lift people or loads over people.
- use only alloy chain for overhead lifting.
- Read and follow all instructions.